READ BEFORE USE

TRITUNE PAR16 GU10 Operation Manual

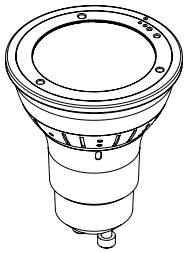

DO NOT FORCE THE ADJUSTMENT RINGS

SPECIFICATIONS

Electrical

Input Voltage	200-240V AC
Power	6.5W
Frequency	50/60 Hz
Power Factor	>0.9
Dimming	YES

Optical

Total Flux	450 lm
STD CCT	2700K/4000K/6500K
STD CRI	≥80
Beam Angle	20°/25°/40°/50°
CBCP	1700 cd @20°

Other

Lamp Base	GU10
Operation Temperature	-20-40°C
Storage Temperature	-20-70°C

PAR16: STOP AT EACH DETENT

Over-rotation will damage beam-angle ring, CCT mechanism, or housing.
Turn gently to the next fixed position, then stop.

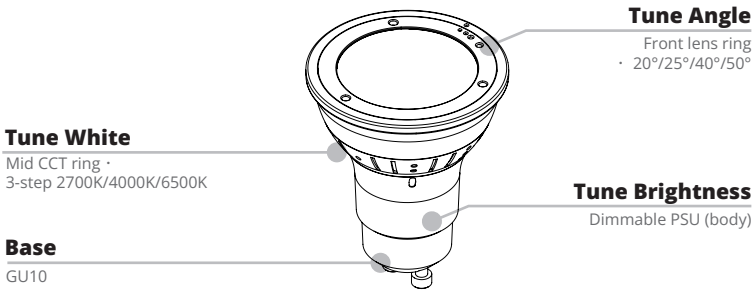

Product Anatomy — Three Adjustment Zones

1 ADJUST BEAM ANGLE

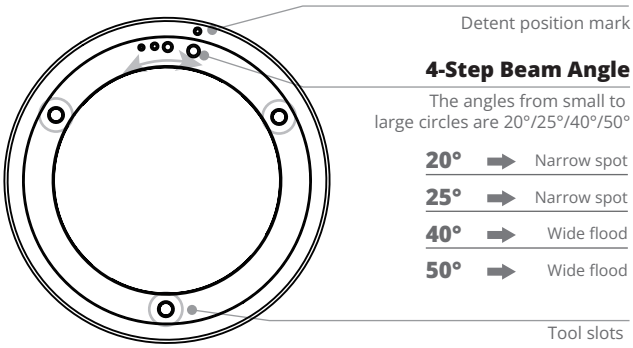

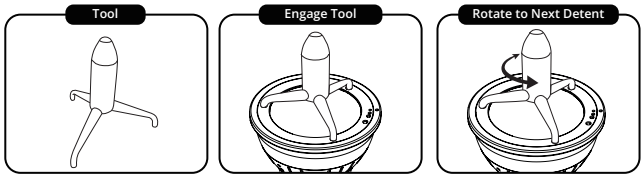

1. **POWER OFF AND COOL**
   Switch off power and allow at least 5 minutes to cool.
2. **HOLD THE LAMP BODY**
   Keep one hand on the body. Do not hold or twist the GU10 base pins.
3. **ENGAGE THE TOOL**
   Insert the tool fully into the front-ring slots.
4. **MOVE ONE DETENT ONLY**
   Rotate gently to 20, 25, 40, or 50 degrees. Stop at the click or position mark.

2 ADJUST COLOR TEMPERATURE

Rotate mid CCT ring (3-step)

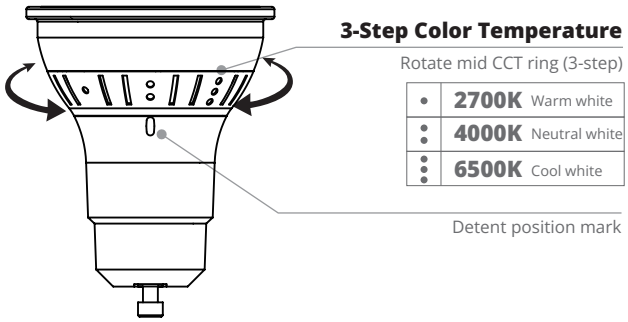

Forcing over-rotation would permanently damage the lamp.

Stop and do not force the rotation if it fails to turn. Confirm that the lamp is cool, the correct ring is being held firmly.
If the ring still does not move, contact BLTC or your distributor.

1. **POWER OFF AND COOL**
   Do not adjust while the lamp is powered or hot.
2. **GRIP THE MID CCT RING**
   Hold the lamp body steady with the other hand.
3. **MOVE ONE DETENT ONLY**
   Select 2700K, 4000K, or 6500K. Stop when the position mark aligns.
4. **STOP IF RESISTANCE INCREASES**
   Never force the ring past its fixed stop. Return to the previous detent and try again gently.

3 QUICK TROUBLESHOOTING

Lamp does not light
Check power, 200-240V AC line, and base contact.

Lamp flickers
Use an LED-compatible dimmer (200-240V AC).

Angle ring does not move
Power off, cool, fully engage the tool, then try one detent gently.

CCT ring does not move
Hold the body, turn only the mid ring, and stop if resistance increases.

4 LIMITED WARRANTY

BLTC warrants this product against defects in materials and workmanship for 2 years from the date of purchase under normal use and installation.

Not covered: damage from incorrect voltage or incompatible dimmers/drivers, unauthorized disassembly, misuse, outdoor installation without a rated enclosure, or normal lumen depreciation.

For service, contact your distributor or BLTC with proof of purchase and the model number.